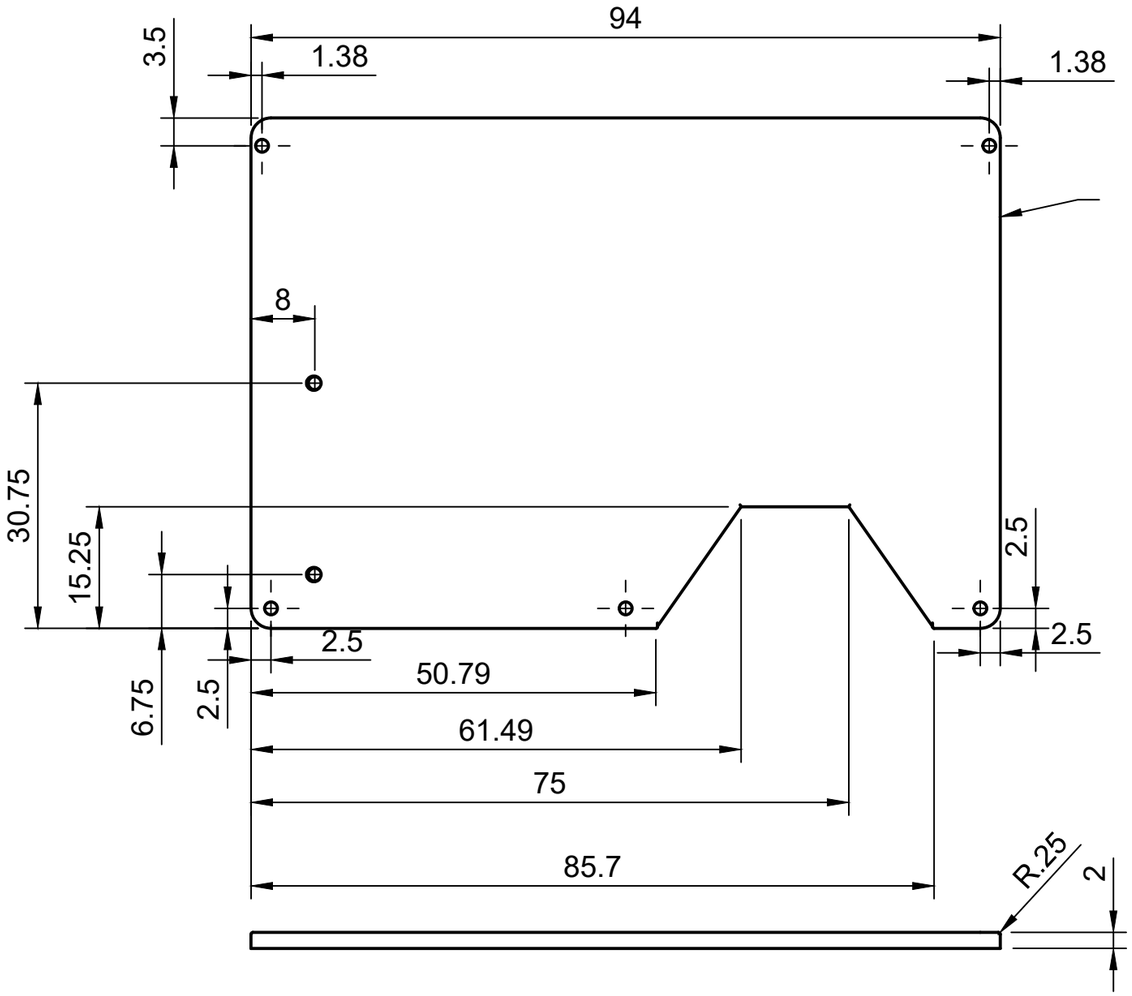

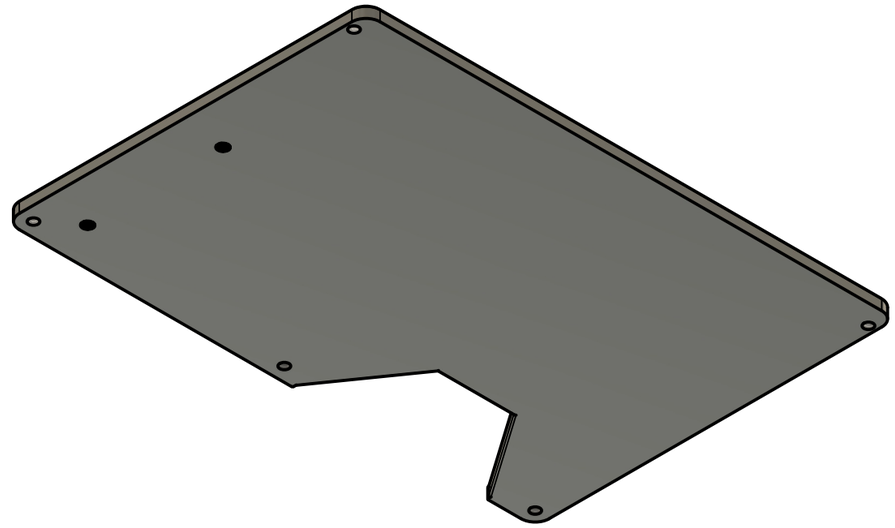

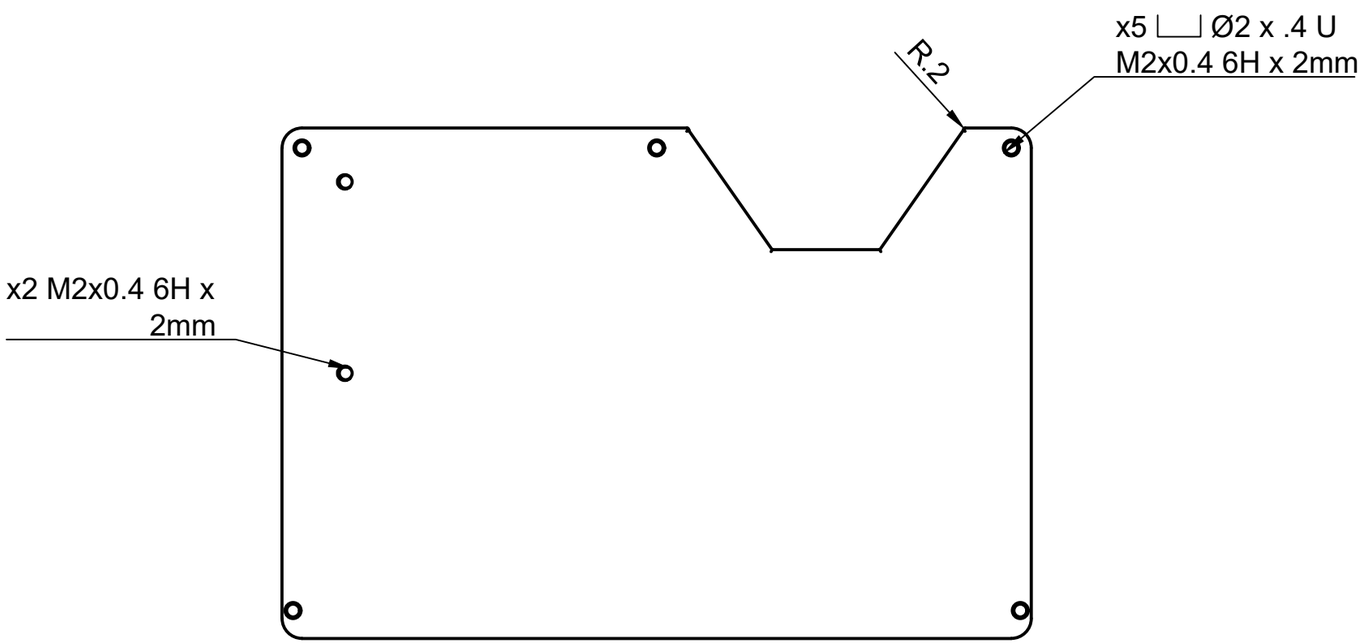

NAME Carter Kiefer		NOTES:
Tolerance +-.01	Unit mm	All exterior edges around thumb cutout are filleted R0.2. Bottom edges are filleted 0.25.
DATE 4/3/26		
PART NAME Wallet Bottom		